123-0003 HILLER FURROWER ASSY.

ITEM #	DESCRIPTION	QUAN	PART No.
	HILLER FURROWER		
	ASSEMBLY		**123-003**
1	FURROWER BLADES	PAIR	111-1006
2	T-BOLT 3/4" X 10" UNC.	1	132-0060
3	WASHER 3/4" FLAT	2	135-1010
4	1/2 NUT 3/4" UNC.	2	134-1030
5	NUT 3/4" UNC.	1	134-1020
6	PITCH PLATE	1	111-3005
7	BOLT 5/8" X 3" UNC.	1	133-2080
8	WASHER 5/8" SPRING	1	135-0070
9	NUT 5/8" UNC.	1	134-0090
10	BOLT 1/2" X 2 1/2" UNC.	3	133-1090
11	WASHER 1/2" SPRING	3	135-0050
12	NUT 1/2" UNC.	3	134-0070
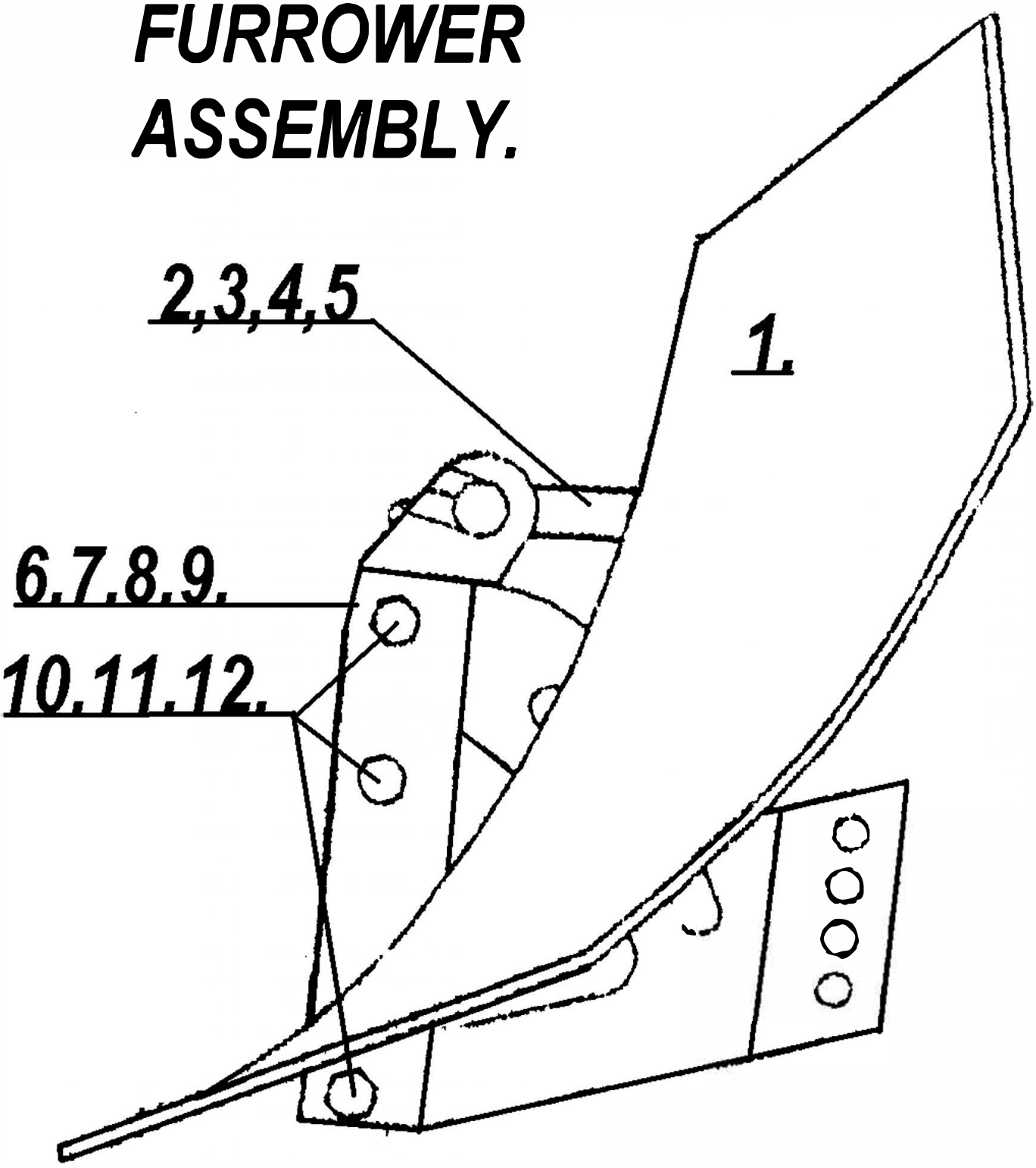
123-0003
HILLER
FURROWER
ASSEMBLY.